VRF Ventilation

By **vrfwizard** - August 29, 2017

VRF Ventilation

The building requirement for ventilation air and the methods of delivering this air vary by geographic location. We'll discuss several methods commonly found in various region of the United States. Indoor air quality (IAQ) is important for occupant health and productivity, in addition to be mandated by most codes, unless your outside air can be proven to be too polluted in which case you can possibly get a variance.

ASHRAE 62.1 Ventilation for Acceptable Indoor Air Quality

The purpose of the standard according to ASHRAE is to "specify minimum ventilation rates and other measures intended to provide indoor air quality that is acceptable to human occupants and that minimizes adverse health effects."

Minimum Ventilation Rates

Most states have minimum ventilation rates that apply to various types of buildings and spaces within those buildings. Common sense tells you that a hair salon would have a higher ventilation rate then an office space. A beauty and Nail salon could require 25 CFM/person compared to the common area in a shopping mall which may only require 9 CFM/person. The CFM/person factors

take into account the density of people for the type of space and for the off gassing of furniture and construction materials.

Maintaining a minimum ventilation rate helps ensure a minimum level of fresh outside air is delivered to the space. The more outside air brought into the space the larger the air conditioner required to handle the additional load.

VRF Ventilation Methods

There are five basic methods of bringing in VRF ventilation air to a VRF system as follows.

DOAS – Dedicated Outside Air System

The **DOAS** unit filters and pre-conditions the VRF ventilation air. One of the benefits of using a **dedicated Outside Air System** that has pre-conditioning included is that it takes the ventilation load off of the indoor fan coil unit. The DOAS is sized just to handle the VRF ventilation load and not the full cooling or heating load of each space, this helps reduce the size of the unit. There are two commons methods of **DOAS**, as follows;

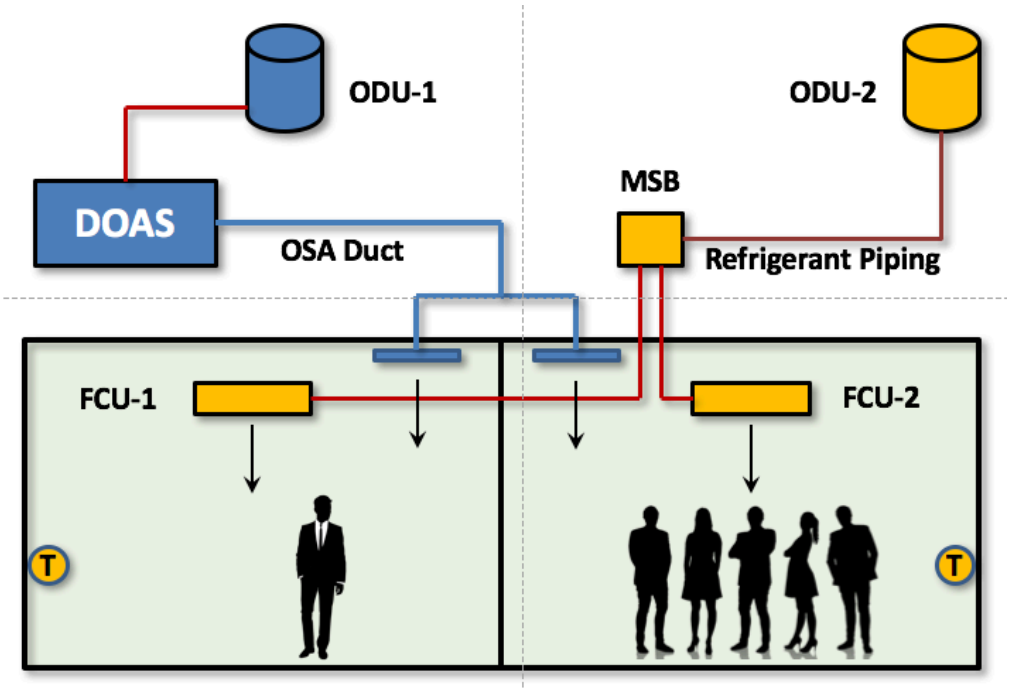

Decoupled Dedicated Outside Air System. This system provides **VRF** ventilation air directly to the space and not directly to the Indoor Fan Coil Unit. The VRF ventilation air doesn't directly Passover the Indoor Unit coil but instead

is delivered through a grille or diffuser, or dumped into the return air attic for that fan coil.

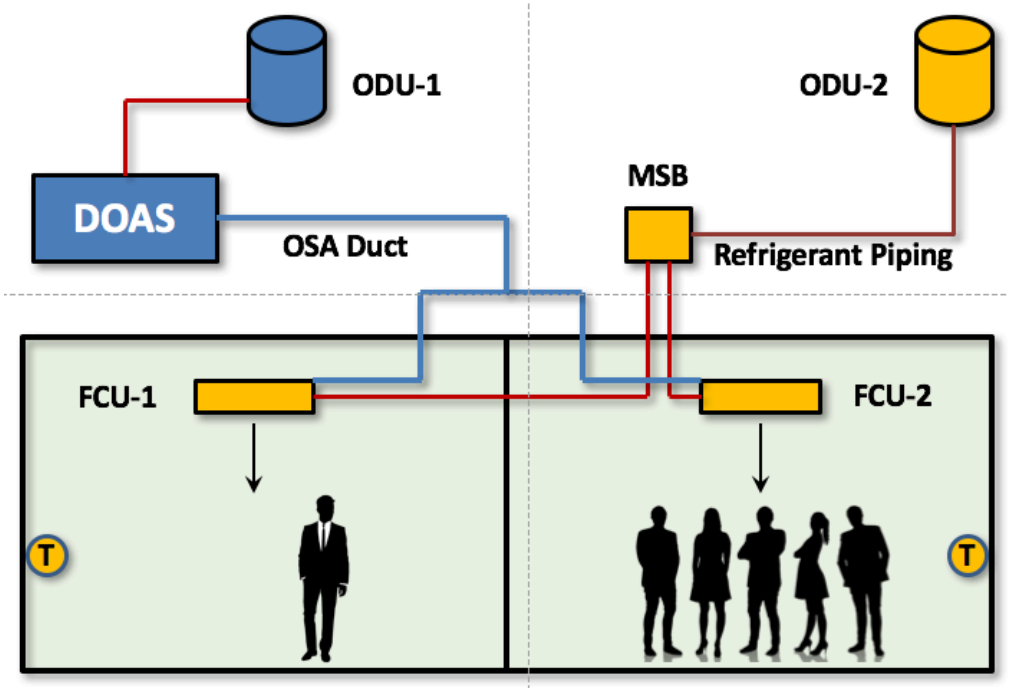

Coupled Dedicated Outside Air System. This system provides **VRF** ventilation air directly to Indoor Fan Coil Unit or the return air duct; hence it's coupled with the unit. This provides a direct path to the unit. Unfortunately not all indoor fan coil units are made to accept a direct outside air connection.

The decoupled method avoids return air filter blow back caused when the fan coil unit is off and the **DOAS** is running when using the coupled method. Either way, consideration must be made for controlling the **DOAS** when the indoor fan coils are in off mode. Otherwise you run the risk of blowing the OSA through a system that is in the off mode. This can be accomplished with motorized dampers on each branch duct feeding a fan coil or space.

VRF Ventilation Air Ducted Directly to Indoor VRF Unit

With this method you duct straight to the indoor unit or return air duct without the benefits of a **VRF DOAS** unit. There is no pre-conditioning of the VRF ventilation air, so the indoor unit will need to handle the load created from this unconditioned air.

Natural Ventilation

The use of operable windows might be acceptable for your exterior zones. Check with your local governing authority. There are some challenges if the outdoor air

has high moisture content. The indoor unit will need to be up sized to handle the additional load caused by the unconditioned outside air.

Also, depending on your energy code, you could be required to provide a window switch that shuts off the **Air Conditioner** when the window is opened.

VRF Ventilation with Fan Assisted Outside Air

Another method would be to draw VRF ventilation air into the room through a louvered opening with a fan. The fan can exhaust air from the space by pulling outside air through a filtered louvered opening. It's important to use filtration to avoid bringing pollutants into the space.

ERV – Energy Recovery Ventilator

Similar to the method above, except that you could use an **Energy Recovery Ventilator** (ERV) to pull in outside air while exhausting conditioned air through the same device. The ERV will recover some of the heat that otherwise would have been lost by the exhaust fan.

Economizers

In states like California you can get away from the Title-24 requirement of an economizer by using one of the allowable exceptions. One of those exceptions is to increase the efficiency of the air conditioner over the benchmark standard. In some regions this equates to a 30% increase in efficiency over the benchmark required to avoid complying with the code mandated economizer. Using a **VRF system** is one of the way's to bypass the requirement for an economizer.

See how ventilation, People, Equipment and Infiltration affect VRF Ventilation and Sensible Heat Ratio.

Check out How to Calculate Cooling Loads. or VRF Ventilation and Sensible Heat Ratio